SilverLine
distributed by Tameo Kits

SLK113
TOLEMAN HART TG183B
A. Senna - Test Silverstone
9th November 1983

SilverLine distributed by Tameo Kits

Via Valle, 111 - P.O. Box 61
17022 BORGIO VEREZZI - SV - ITALY
Tel. 39 019 - 615.250 - Fax. 39 019 - 615.310

(I) Made in Italy. Modello per collezionisti in scala 1/43. Vietata la vendita ai minori di 14 anni. Nocivo per ingestione. Conservare fuori dalla portata dei bambini. Tameo Kits declina ogni responsabilità per un uso improprio del prodotto.

(GB) Made in Italy. Collector 1/43 Scale Models. Not for sale to persons under 14 years of age. Dangerous if swallowed. Keep out of reach of children. Tameo Kits not held responsable for any damage or injury resulting from improper use of the product.

(F) Made in Italy. Modèle pour collectioneurs échelle 1/43. Vente interdite aux enfants de moins de 14 ans. Dangereux si avalé. Conserver hors de la portée des enfants. Tameo Kits décline toute responsabilité dans le cas de dommages dérivants de l'usage non approprié du produit.

(D) Made in Italy. Sammlermodell im Massstab 1/43. Verkauf an Jugendliche unter 14 Jahren verboten. Schädlich bei Verschlucken. Tameo Kits lehnt jede Verantwortung bei unsachgemässer Benutzung des Produktes ab.

(E) Hecho en Italia. Coleccion de modelos a escala 1/43. Prohibida la venta a menores de 14 años.No comestible. Mantener fuera del alcanc e de los niños. Tameo Kits no se hace responsable de los daños causados por el uso incorrecto de este producto.

Web Site: www.tameokits.com E-mail: sales@tameokits.com E-mail: technical@tameokits.com

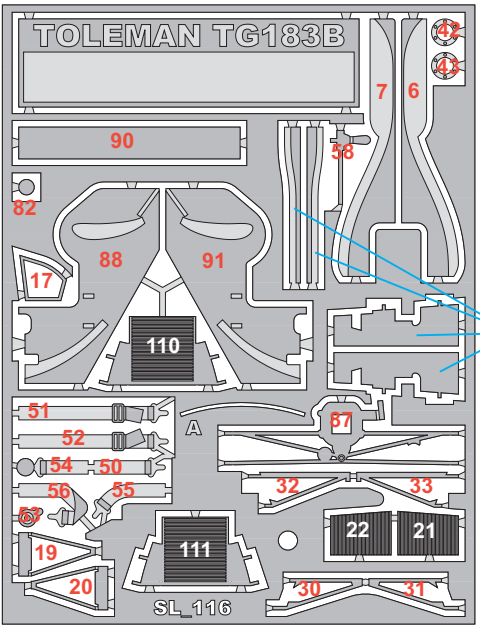

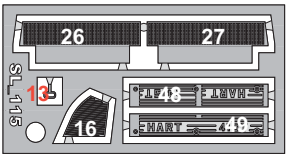

Non usare

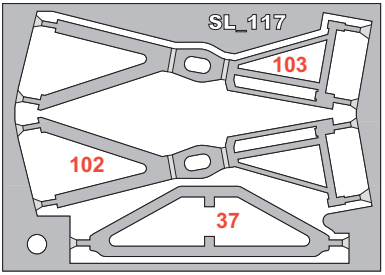

LUNGHEZZA	PEZZO	DIAMETRO	FILO D'ACCIAIO
Lenght	Part	Diameter	Steel wire
Laenge	Stuecke	Durchmesser	Stahldraht
Longuer	Pièce	Diamètre	Fil acier
Largo	Piezas	Diametro	Alambre d'acero

PIEGARE	NON USARE	LUCE	FILO DI PIOMBO	INCOLLARE E STUCCARE PRIMA DELLA VERNICIATURA
To bend	Do not use	Light	Lead wire	Glue and stick before painting
Biegen	nicht benuetzen	Licht	Bleidraht	Vor der lackierung verkleben und verspachteln
Plier	Ne pas employer	Feux	Fil de plomb	Coller et mastiquer avant de vernir
Doblar	No usa	Lux	Alambre de plomo	Pegar y estucar antes de pintar

BLU - BLUE
BLAU - BLEU
AZUL
RAL 5003

ROSSO - RED
ROT - ROUGE
ROJO
TAMIYA X7

BLU SEMITRASPARENTE
CLEAR BLUE - FHELLBLAU
BLEU CLAIRE
TAMIYA X23

ARGENTO METALLIZZATO - METALLIC SILVER
METALLISIERT SILBER - ARGENT MÉTALISÉ
PLATA METALIZADA
TAMIYA TS83

ROSSO OPACO - FLAT RED
MATTROT - ROUGE OPAQUE
ROJO MATE
TAMIYA XF7

BIANCO - WHITE
WEISS - BLANC
BIANCO
TAMIYA TS26

NERO OPACO - MATT BLACK
MATTSCHWARZ - NOIRE OPAQUE
NEGRO OPACO
TAMIYA TS6

ARGENTO - SILVER
SILBER - ARGENT
PLATA
TAMIYA X11

GRIGIO FUCILE CHIARO - LIGHT GUN METAL
LIGHT GUN METAL - GRIS FUSIL CLAR
GRIS FUSIL CLARO
TAMIYA TS42

NERO OPACO - MATT BLACK
MATTSCHWARZ - NOIRE OPAQUE
NEGRO OPACO
TAMIYA XF1

GRIGIO FUCILE - GUN METAL
GUN METAL - GRIS FUSIL
GRIS FUSIL
TAMIYA TS38

ROSSO SEMITRASPARENTE - CLEAR RED
FHELLROT - ROUGE CLAIRE
ROJO CLARO
TAMIYA X27

NERO SEMI LUCIDO - SEMI GLOSS BLACK
SEIDENMATT SCHWARZ - NOIR SEMI BRILLANT
NEGRO SEMIBRILLANTE
TAMIYA TS29

BIANCO OPACO - FLAT WHITE
MATTWEISS - BLANC OPAQUE
BIANCO MATE
TAMIYA TS27

ALLUMINIO LUCIDO - GLOSS ALUMINIUM
POLIERTEM ALUMINIUM - ALUMINIUM BRILLANT
ALUMINIO BRILLANTE
TAMIYA TS17

NO PAINT - KEINE FARBE
PAS DE PEINTURE
SIN PINTURA
NON COLORARE

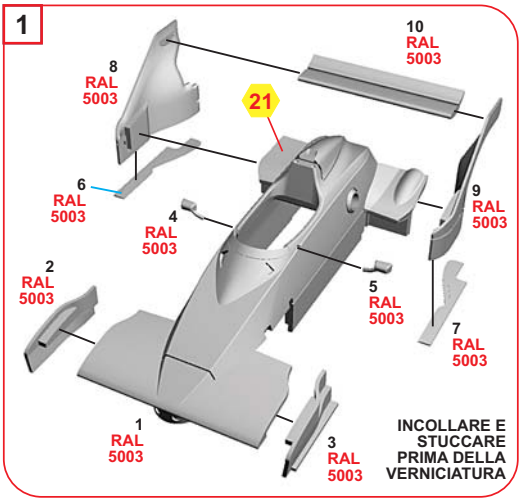

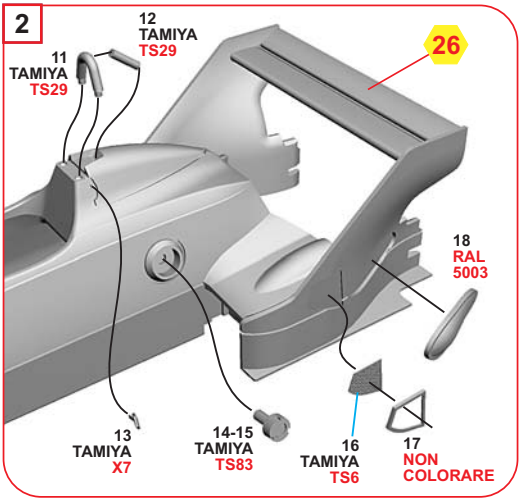
2
11
TAMIYA
TS29
12
TAMIYA
TS29
26
18
RAL
5003
13
TAMIYA
X7
14-15
TAMIYA
TS83
16
TAMIYA
TS6
17
NON
COLORARE

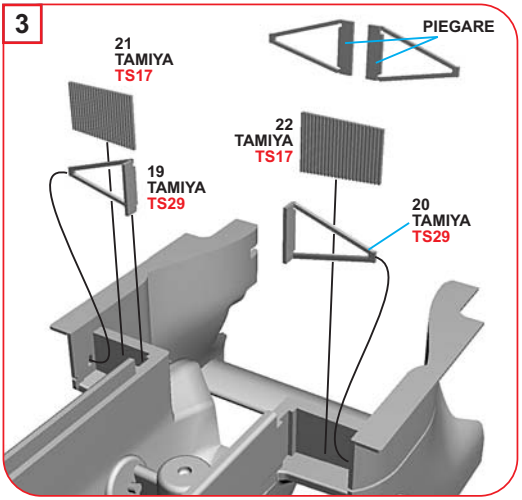
3
PIEGARE
21
TAMIYA
TS17
22
TAMIYA
TS17
19
TAMIYA
TS29
20
TAMIYA
TS29

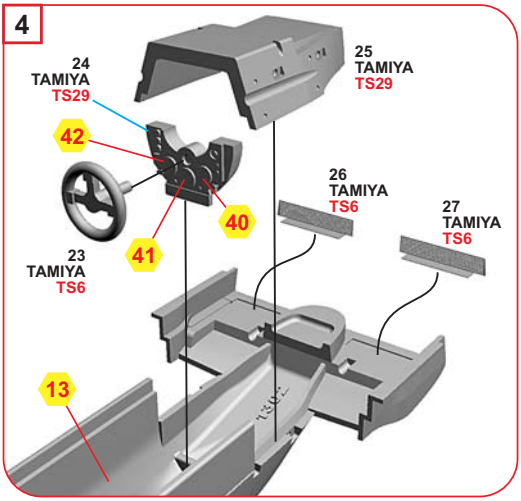
4
24
TAMIYA
TS29
25
TAMIYA
TS29
42
26
TAMIYA
TS6
27
TAMIYA
TS6
40
41
23
TAMIYA
TS6
13

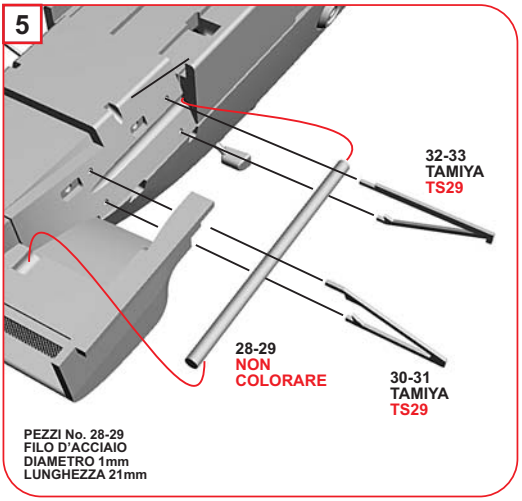
5
32-33
TAMIYA
TS29
28-29
NON
COLORARE
30-31
TAMIYA
TS29
PEZZI No. 28-29
FILO D'ACCIAIO
DIAMETRO 1mm
LUNGHEZZA 21mm

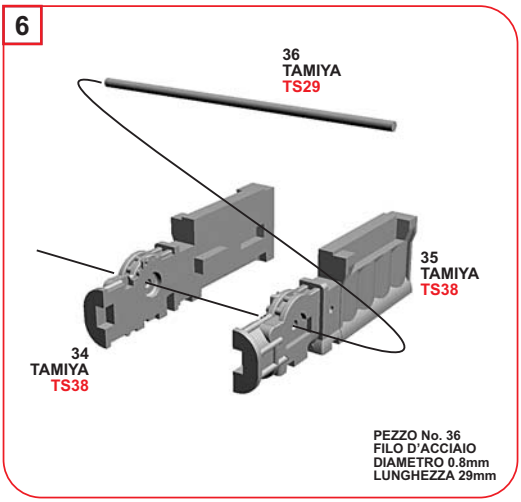
6
36
TAMIYA
TS29
35
TAMIYA
TS38
34
TAMIYA
TS38
PEZZO No. 36
FILO D'ACCIAIO
DIAMETRO 0.8mm
LUNGHEZZA 29mm

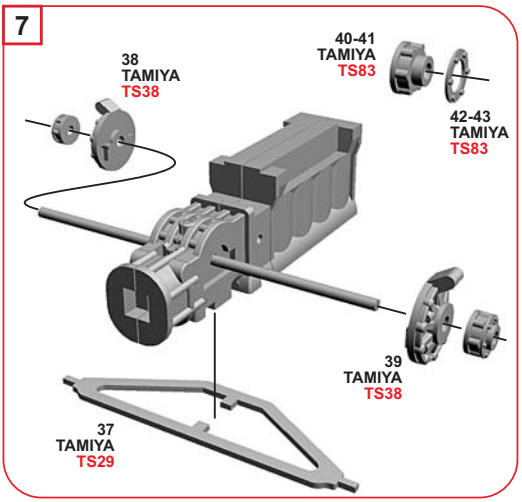
7
38
TAMIYA
TS38
40-41
TAMIYA
TS83
42-43
TAMIYA
TS83
39
TAMIYA
TS38
37
TAMIYA
TS29

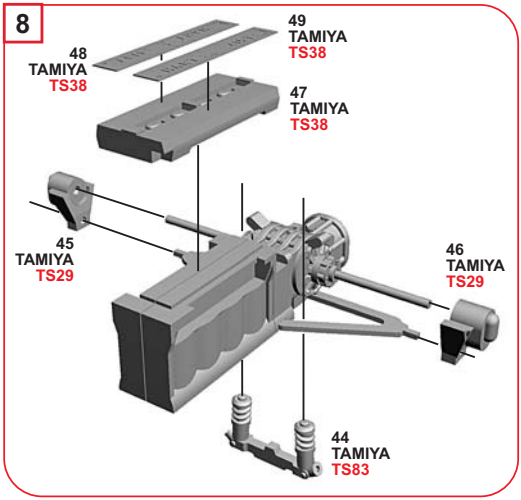
8
48 TAMIYA TS38
49 TAMIYA TS38
47 TAMIYA TS38
45 TAMIYA TS29
46 TAMIYA TS29
44 TAMIYA TS83

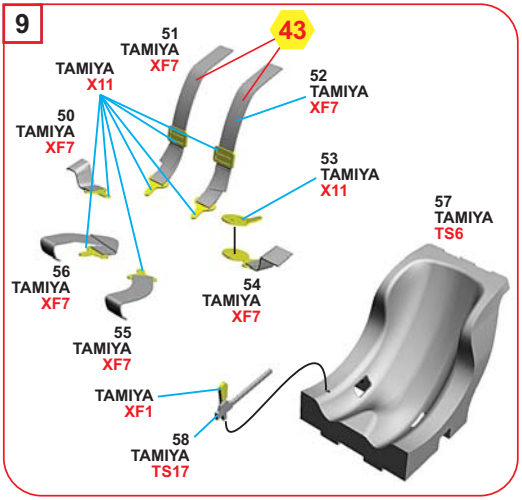
9
43
51 TAMIYA XF7
TAMIYA X11
52 TAMIYA XF7
50 TAMIYA XF7
53 TAMIYA X11
57 TAMIYA TS6
56 TAMIYA XF7
54 TAMIYA XF7
55 TAMIYA XF7
TAMIYA XF1
58 TAMIYA TS17

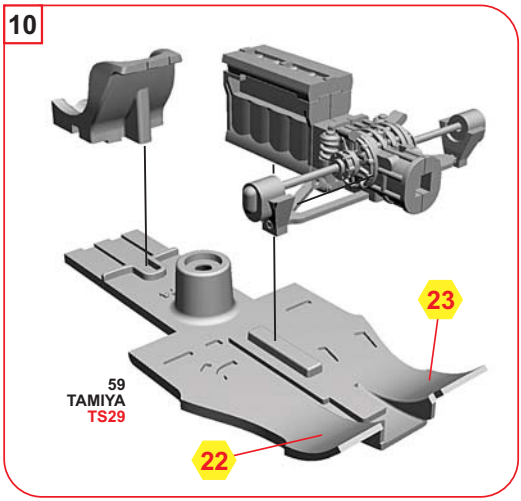
10
23
59 TAMIYA TS29
22

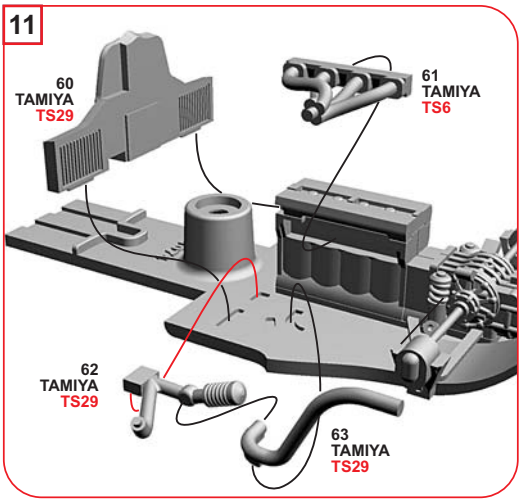
11
60 TAMIYA TS29
61 TAMIYA TS6
62 TAMIYA TS29
63 TAMIYA TS29

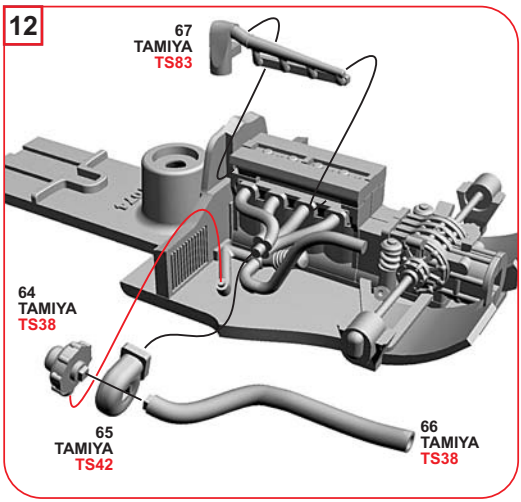
12
67 TAMIYA TS83
64 TAMIYA TS38
65 TAMIYA TS42
66 TAMIYA TS38

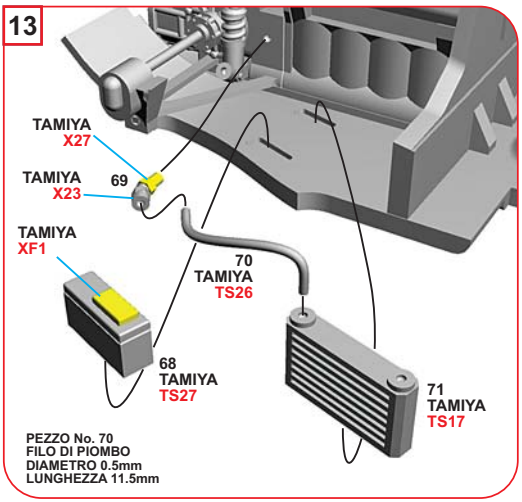
13
TAMIYA X27
TAMIYA X23
69
TAMIYA XF1
70 TAMIYA TS26
68 TAMIYA TS27
71 TAMIYA TS17
PEZZO No. 70
FILO DI PIOMBO
DIAMETRO 0.5mm
LUNGHEZZA 11.5mm

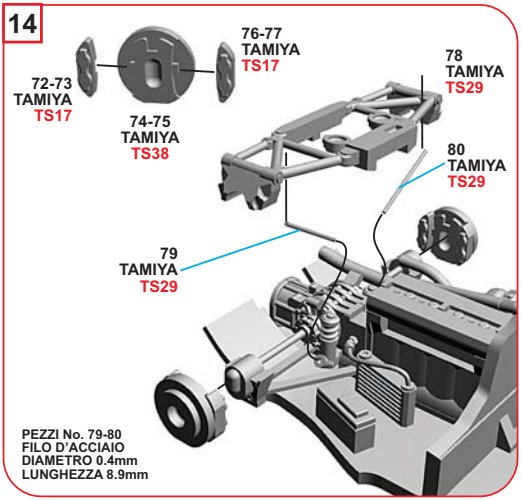
14
72-73
TAMIYA
TS17
74-75
TAMIYA
TS38
76-77
TAMIYA
TS17
78
TAMIYA
TS29
80
TAMIYA
TS29
79
TAMIYA
TS29
PEZZI No. 79-80
FILO D'ACCIAIO
DIAMETRO 0.4mm
LUNGHEZZA 8.9mm

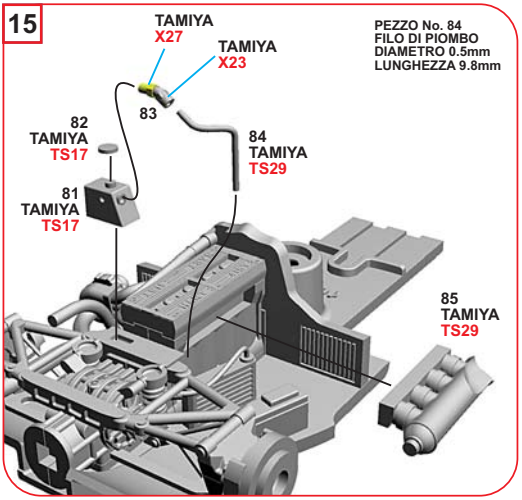
15
TAMIYA
X27
TAMIYA
X23
PEZZO No. 84
FILO DI PIOMBO
DIAMETRO 0.5mm
LUNGHEZZA 9.8mm
83
82
TAMIYA
TS17
84
TAMIYA
TS29
81
TAMIYA
TS17
85
TAMIYA
TS29

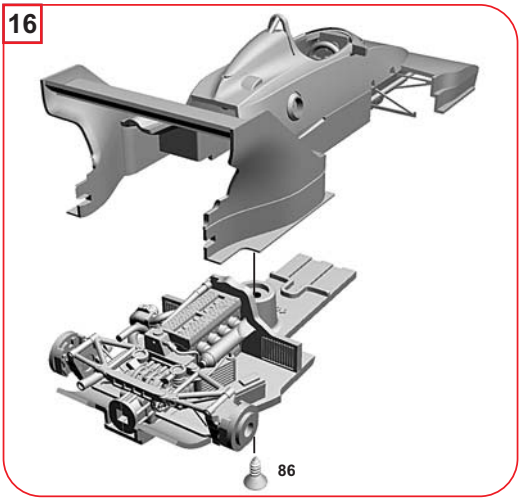
16
86

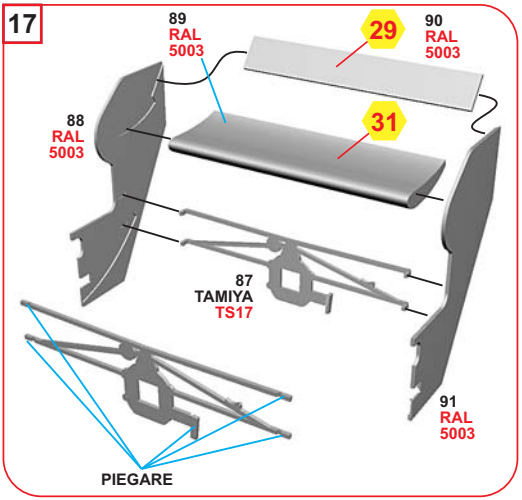
17
89
RAL
5003
29
90
RAL
5003
88
RAL
5003
31
87
TAMIYA
TS17
91
RAL
5003
PIEGARE

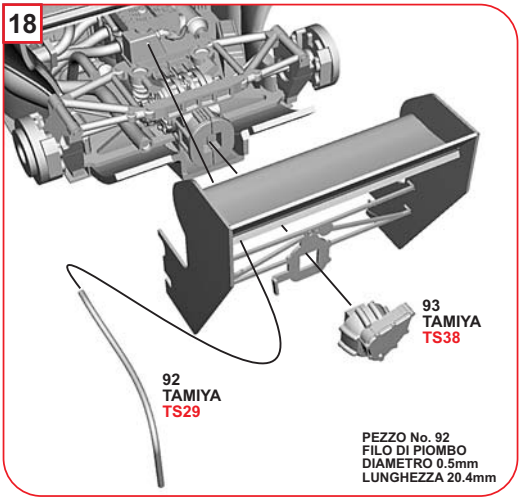
18
93
TAMIYA
TS38
92
TAMIYA
TS29
PEZZO No. 92
FILO DI PIOMBO
DIAMETRO 0.5mm
LUNGHEZZA 20.4mm

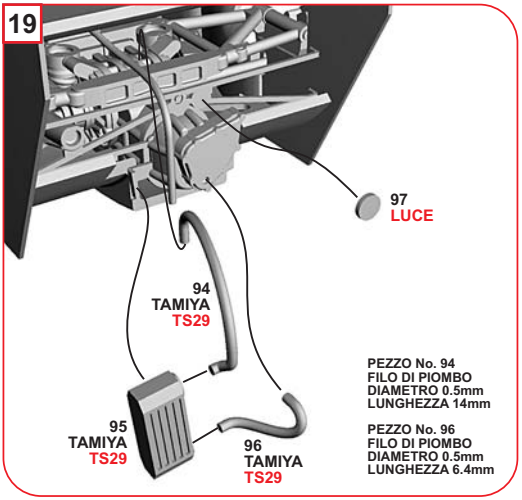
19
97
LUCE
94
TAMIYA
TS29
PEZZO No. 94
FILO DI PIOMBO
DIAMETRO 0.5mm
LUNGHEZZA 14mm
PEZZO No. 96
FILO DI PIOMBO
DIAMETRO 0.5mm
LUNGHEZZA 6.4mm
95
TAMIYA
TS29
96
TAMIYA
TS29

20

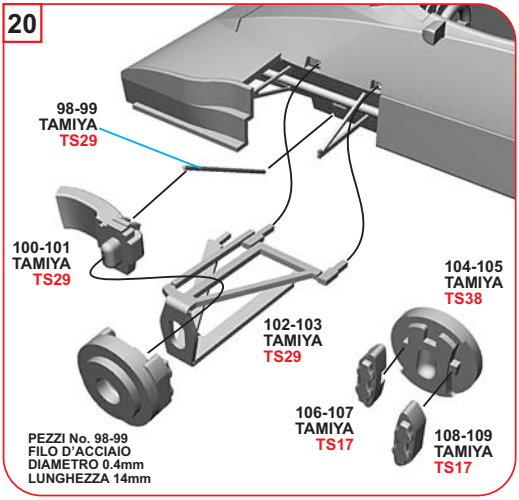
98-99
TAMIYA
TS29
100-101
TAMIYA
TS29
102-103
TAMIYA
TS29
104-105
TAMIYA
TS38
106-107
TAMIYA
TS17
108-109
TAMIYA
TS17
PEZZI No. 98-99
FILO D'ACCIAIO
DIAMETRO 0.4mm
LUNGHEZZA 14mm

21

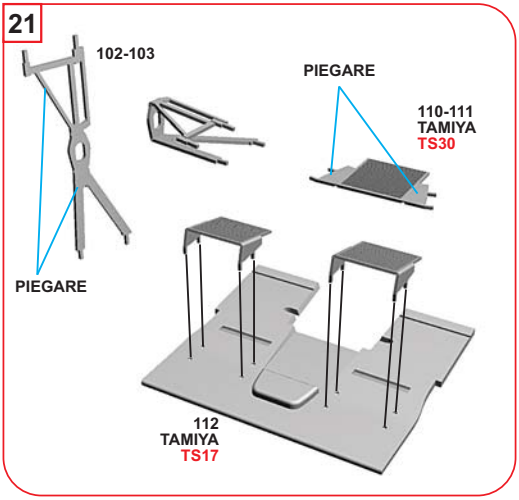
102-103
PIEGARE
PIEGARE
110-111
TAMIYA
TS30
112
TAMIYA
TS17

22

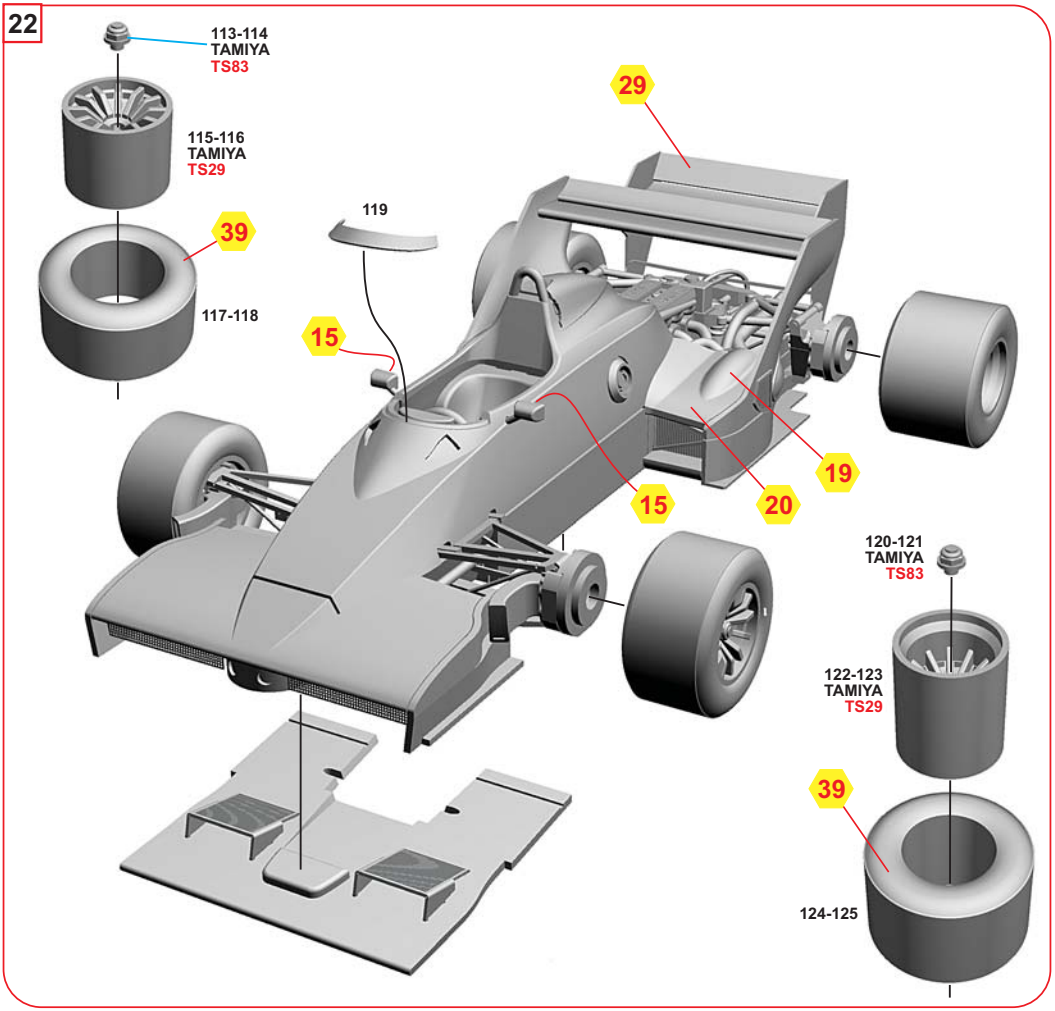
113-114
TAMIYA
TS83
115-116
TAMIYA
TS29
39
117-118
119
29
15
15
20
19
120-121
TAMIYA
TS83
122-123
TAMIYA
TS29
39
124-125

MAGIRUS
SERGIO TACCHINI
A.SENNA
Candy
MAGIRUS
35
CHAMPION
PIRELLI

29
18
18
SERGIO TACCHINI
Candy
BP
MAGIRUS
PIRELLI
CHAMPION
35
Candy
Candy
Takeman
Hart

SERGIO TACCHINI
Candy
BP
MAGIRUS
PIRELLI
Tolemen
Hart
CHAMPION
PIRELLI
MAGIRUS